N4FMN WWV 60 Khz PREAMPLIFIER
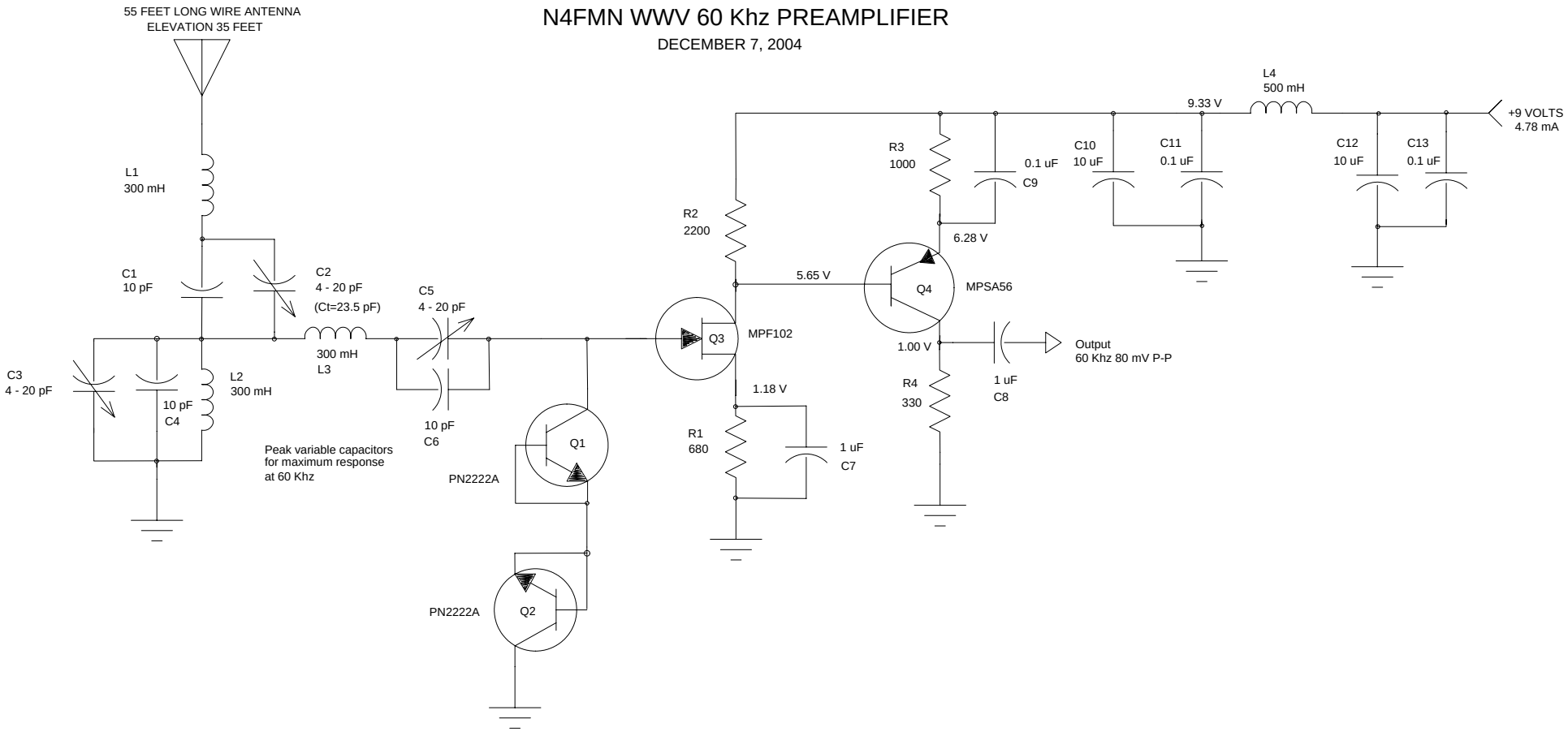
DECEMBER 7, 2004