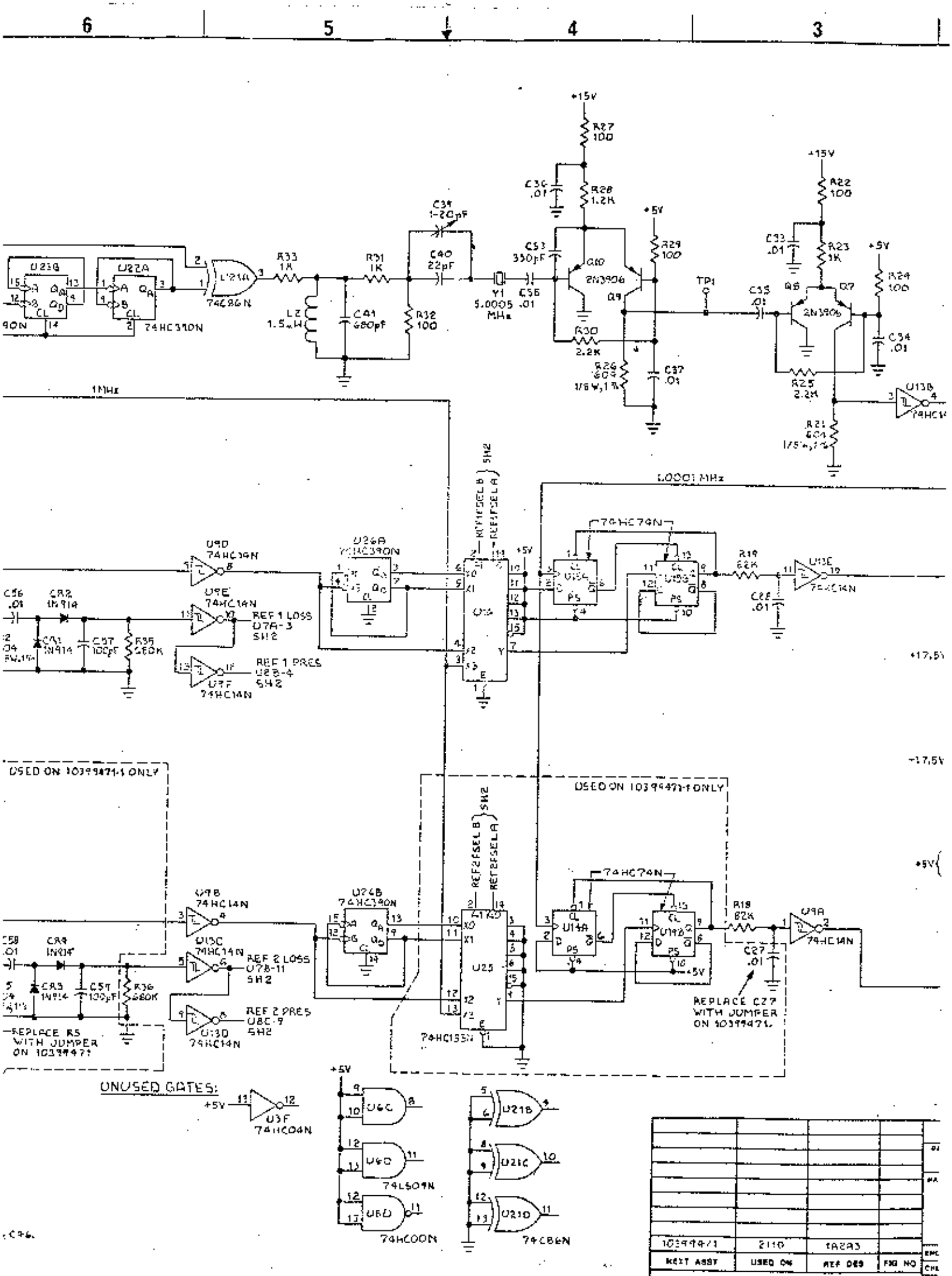
6
5
4
3
+15V
R27 100
C36 .01
R28 1.2K
C34 1-20pF
C40 22pF
R33 1K
R31 1K
L2 1.5uH
C41 680pf
R32 100
Y1 5.0005 MHz
C56 .01
C53 350pF
Q10 2N3906
Q9
R29 100
+5V
R30 2.2K
R26 604 1/8W,1%
C37 .01
TP1
C35 .01
R22 100
C33 .01
R23 1K
Q6
Q7
2N3906
R24 100
C34 .01
R25 2.2K
R21 604 1/8W,1%
U13B 74HC14N
74LS86N
U23B
U22A
74HC390N
1MHz
0.0001 MHz
U9D 74HC14N
U9E 74HC14N
REF 1 LOSS U7A-3 SH2
REF 1 PRES U2B-4 SH2
U7F 74HC14N
C56 .01
CR2 1N914
CR1 1N914
C57 100pF
R35 680K
U26A 74HC390N
REF1SEL B
REF1SEL A
SH2
U24
74HC74N
U15C
U15B
R19 82K
C28 .01
U13E 74HC14N
+17.5V
USED ON 10399471-1 ONLY
U9B 74HC14N
U13C 74HC14N
REF 2 LOSS U7B-11 SH2
REF 2 PRES U8C-9 SH2
U13D 74HC14N
CR4 1N914
CR3 1N914
C58 .01
C57 100pF
R36 680K
REPLACE R5 WITH JUMPER ON 10399471
U24B 74HC390N
REF2SEL B
REF2SEL A
U25
74HC153N
U14A
U14B
R18 82K
C27 .01
U9A 74HC14N
REPLACE C27 WITH JUMPER ON 10399471
UNUSED GATES:
U3F 74HC04N
U6C
U6D
74LS04N
U6B
74HC00N
U21B
U21C
U21D
74C86N
10399471
2110
1A293
NEXT ASSY
USED ON
REF DES
FIG NO