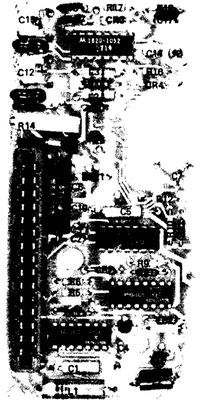

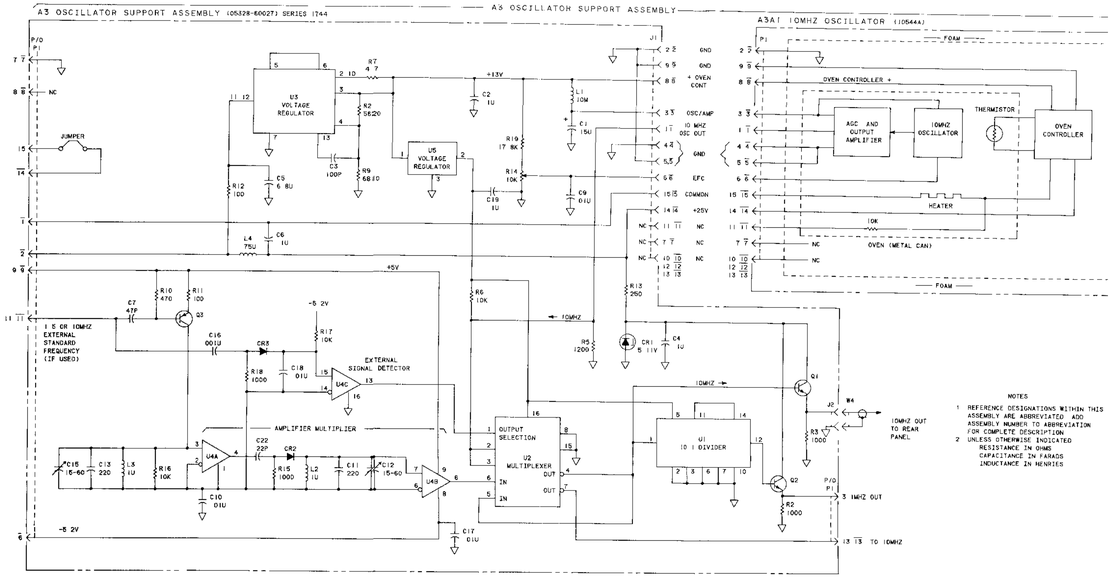

Figure 8-10. A3/A3A1 Oscillator Support Schematic and Components