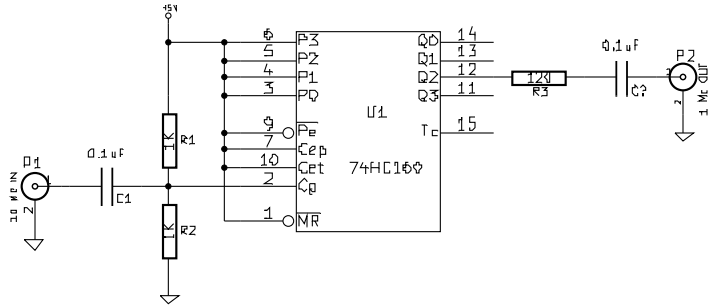

jfits.ca		
File: sine wave divide by ten.sch		
Sheet: /		
Title: Thunderbolt 10Mc Divide by Ten		
Size: A4	Date: 27 mar 2011	Rev: 1.0
KiCad E.D.A. eeschema (2010-03-14)-final		Id: 1/1